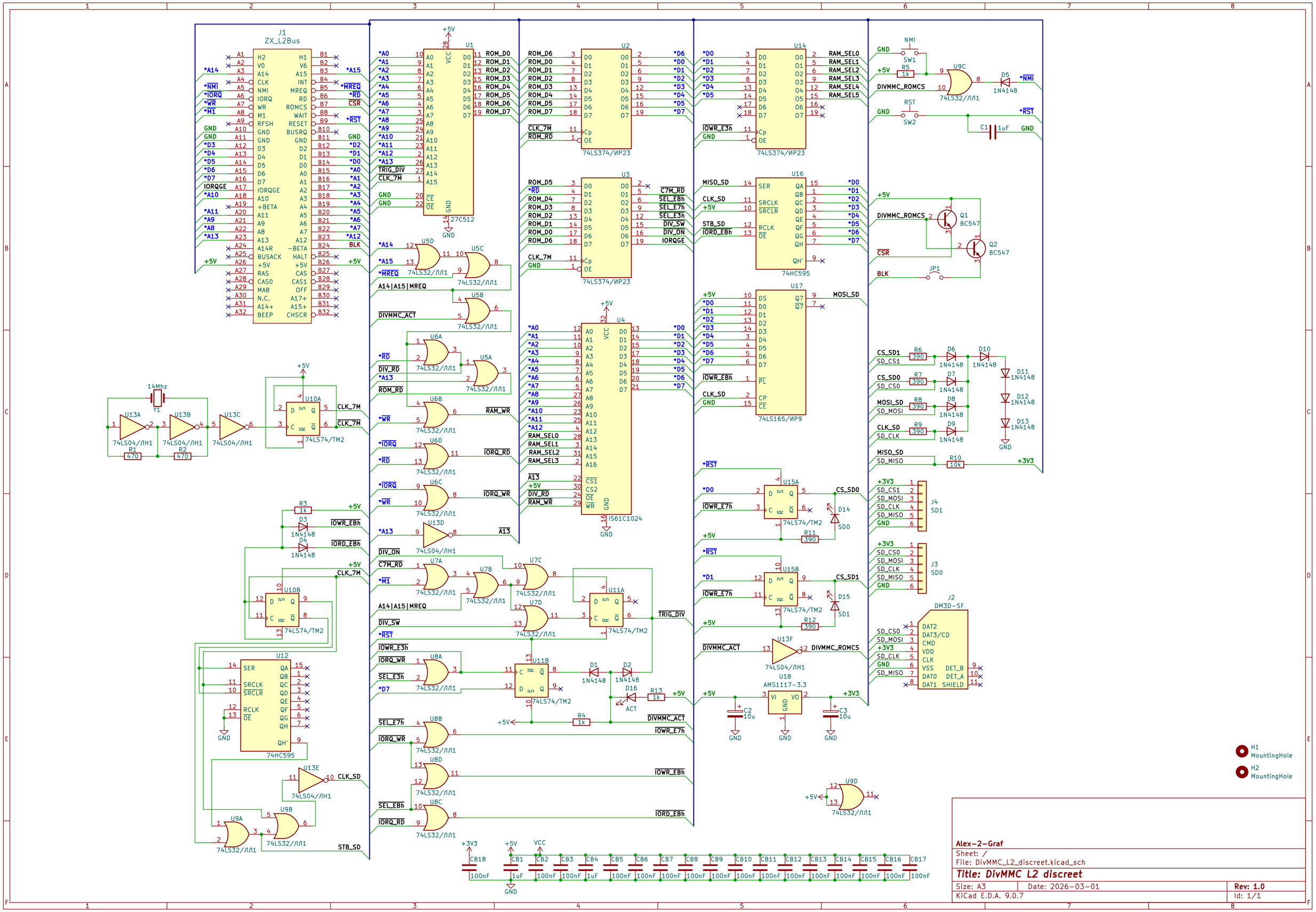

Alex-2-Graf
Sheet: /
File: DivMMC_L2_discreet.kicad_sch

Title: DivMMC L2 discreet

Size: A3	Date: 2026-03-01	Rev: 1.0
KiCad E.D.A. 9.0.7		Id: 1/1