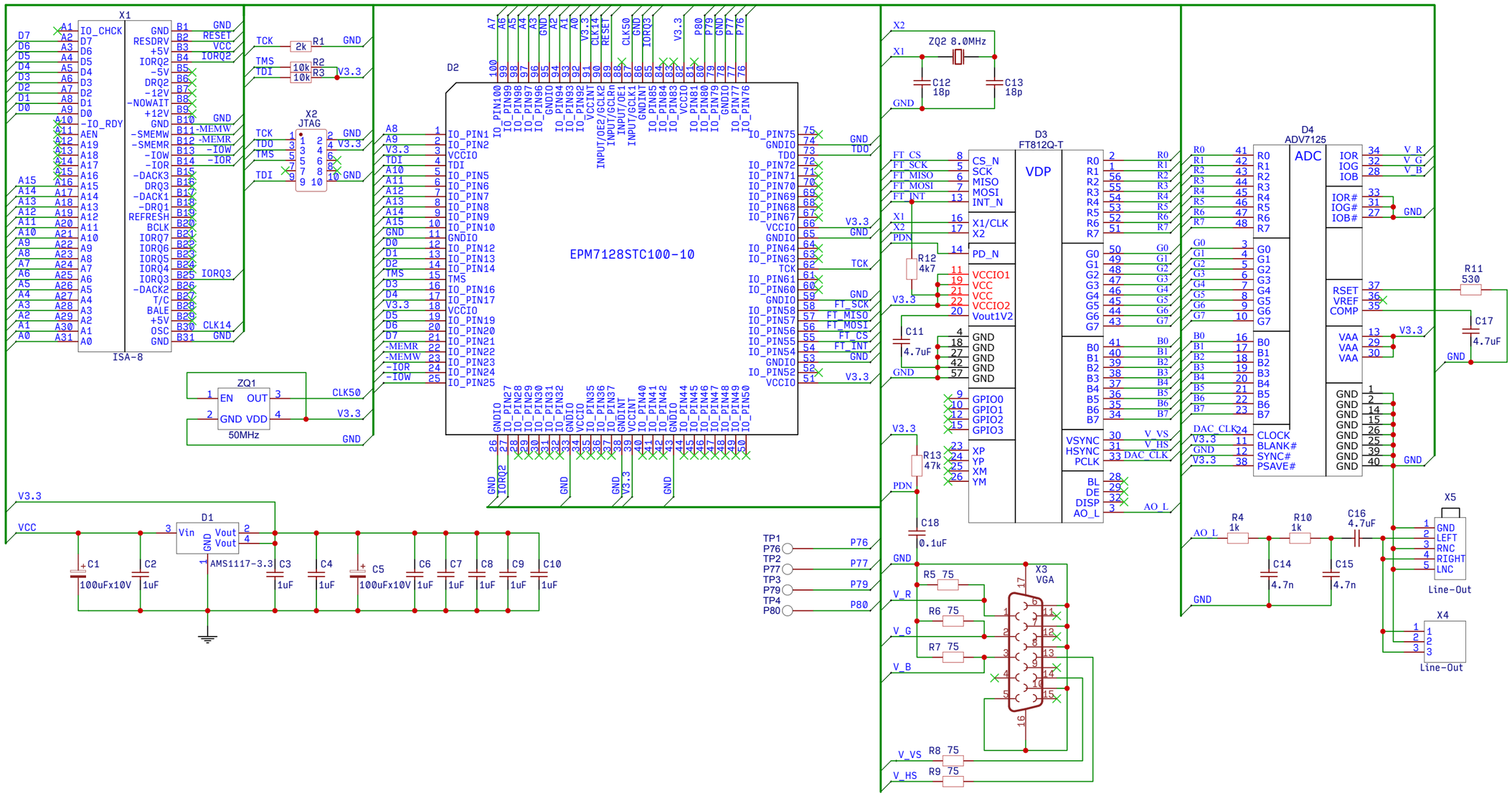

TITLE: Sprinter-FT – ISA FT812 Video Adapter	REV: 1.0
Company: sprinter.ru	Sheet: 1/1
Date: 2024-11-01 Drawn By: Romych	